Tidebreak™

DEPLOYING SMART(ER) CLASSROOMS AT SMALLER EXPENSE

How to Sustain Learning Space Innovation in a Time of Dramatic Budget Cuts

> *"IT leaders continue to face growing expectations for new and existing IT services that exceed budget capacity, escalating maintenance costs that take up larger percentages of IT budgets, and increased funding pressures ... These changes are having a positive impact ... through better-architected results, informed decision-making, and improved expectation management."*
>
> *2008 EDUCAUSE Current Issues Committee*

Academic institutions spend considerable sums to maintain their classroom technology, but in many cases they merely replace old equipment with similar components and so do not add any new capabilities. Forward-thinking institutions treat technology "refresh" cycles as an opportunity to strategically invest their resources to build innovative learning spaces.

A new form of classroom infrastructure now allows these institutions to add new collaborative learning capabilities to their learning spaces while simultaneously lowering cost.

Traditional technology-enabled classrooms use hardware-intensive, custom-designed AV systems that provide only basic presentation capabilities for a single person in the room – the teacher. Students in such classrooms can ask questions but have little opportunity to directly interact with material displayed onscreen.

Tidebreak leverages an advanced software architecture to produce richer participation and student engagement in the classroom. Our technology solutions replace AV selection-and-control features with sophisticated interaction capabilities to support collaborative instructional pedagogies that enhance student learning.

Lower Costs by 41% and Improve Operating Efficiencies

Tidebreak's ClassSpot™ provides advanced benefits for faculty and students; its architecture also offers advantages from a systems management perspective. For a typical classroom it decreases the Total Cost of Ownership (TCO) by 41%, streamlines support operations, and reduces the environmental impact of advanced technology learning spaces. This whitepaper describes in detail how this new design approach:

- Saves 27% or more on installed systems cost
- Reduces power consumption by 25%
- Cuts AV maintenance costs to save 14% more
- Decreases downtime due to hardware failures
- Slashes custom cabling retrofit expenses
- Leverages existing procurement agreements to save time and cost
- Minimizes required faculty training needs
- Helps campus staff deliver high-value services

Enable Sustainable Innovation

ClassSpot enables institutions to create low-cost advanced classroom designs that can be widely implemented in a cost-effective way. Campuses can evolve and sustain world-class learning space facilities specifically by:

- Keeping every classroom updated with the latest interaction features
- Making it simple to teach in multi-screen configurations
- Providing flexibility to support varied pedagogies
- Creating advanced configurations for active learning
- Providing tools to measure the impact on learning activity

ClassSpot enables academic institutions to deliver on the promise of interactive classroom technologies and assess their impact on student learning.

REDUCING THE COST OF ADVANCED TECHNOLOGY CLASSROOMS

ClassSpot's comprehensive software-based infrastructure delivers several distinct advantages that minimize the cost of advanced technology classrooms and makes them easier to operate and support.

Cut Installed Technology Costs by 27% or More With New Systems Architecture

Institutions typically budget $15,000-$30,000 for each of their mid-size classrooms to replace installed AV hardware components every 3-5 years. In most cases, the existing classroom capabilities are merely replicated with newer equipment. The standard capabilities – device selection and control – do not change significantly to enhance student participation in class.

The classroom technology refresh process can be an opportunity to build state-of-the-art learning spaces. A system designed with ClassSpot at its core provides more functionality at a lower total cost, replacing AV switching and control hardware with a software infrastructure that enables interaction over the existing computer network. **Figure 1** shows a comparison of traditional vs. ClassSpot-centered design approaches. **Figure 2** provides a feature comparison for the designs.

Table 1 shows a cost analysis for a traditional classroom system approach compared to a system design based on ClassSpot in a deployment of 40 rooms. This scenario shows that ClassSpot can save 27% of the typical cost for installed equipment and maintenance. With additional volume discounts, a deployment in 100 rooms would save more than 50% of typical cost.

Reduce Energy Consumption by 25% or More Due to Smaller Hardware Footprint

Traditional classroom AV systems are energy-intensive. Racks of electronic equipment are usually left running at all times, regardless of whether the equipment is being used. This results in significant electrical power consumption during usage periods despite standby power settings.

Table 2 shows how a representative ClassSpot-based system can reduce electrical power consumption by 25% over traditional rooms because it uses fewer electronic components. Electrical power efficiencies would result in $28,000 in savings for 40 classrooms over 5 years.

Downsize Equipment Maintenance Contracts by Tapping Existing IT Staff Expertise

Traditional AV systems are composed of multiple specialized devices produced by multiple manufacturers. These products require periodic maintenance and adjustment to ensure their performance. Occasionally a component will fail and require replacement. Since specifications change over time as products are updated or discontinued, replacement may involve some systems redesign and control system reprogramming. Outside AV integrators are thus often retained to perform maintenance services and system warranties.

ClassSpot allows institutions to maintain a classroom's systems with in-house IT staff who are familiar with standard computing systems and display components. Computers and display systems are built to industry standard specifications, so products from different manufacturers can be substituted easily; there is no AV control system to reprogram. Thus institutions can dramatically trim their AV maintenance contracts and avoid annual expenses that are typically equivalent to 7% of the original installed AV system cost. This means to an additional 14% in savings for the 5-year TCO.

Table 1. Traditional classroom AV system cost vs. ClassSpot interactive classroom system cost

Traditional Presentation Classroom (Dual Screen) [1]

Item	Qty	Unit Cost	Extended Cost
Projector	2	$2,000	$4,000
Installed Room Computers	2	$700	$1,400
VHS Player	1	$250	$250
AV Switch/Control Components	1	$3,330	$3,330
Control System Touch Panel	1	$3,420	$3,420
Program Audio Speakers	1	$800	$800
Audio Processor	1	$900	$900
Cabling Infrastructure (AV)	1	$1,500	$1,500
Equipment Rack	1	$900	$900
Installation Labor (15% of hardware cost)			$2,475
Installed System Subtotal			*$18,975*
AV Maintenance Contract [2]			$4,620
Total Room Cost (5 Yr)			*$23,595*

ClassSpot Interactive Classroom (Dual Screen)

Item	Qty	Unit Cost	Extended Cost
Projector	2	$2,000	$4,000
Installed Room Computers	2	$700	$1,400
Program Audio Speakers	1	$800	$800
Cabling Infrastructure (CAT6)	1	$400	$400
ClassSpot Software (5 Yr) [3]	1	$6,279	$6,279
Installation Labor (15% of hardware cost)			$990
Installed System Subtotal			*$13,869*
Installed System Savings			***27%***
Total Room Cost (5 Yr)			*$13,869*
Cumulative Cost Savings			***41%***
Net Cost Savings for 40 Rooms			***$389,024***

[1] *AV system cost derived from representative system design proposed by switching and control device manufacturer*

[2] *For years 2-5, annual expense is typically 7% of system cost*

[3] *Assumes license is part of a 40-classroom bundle with multi-year discount*

Table 2. A Comparison of energy consumption in traditional AV classrooms vs. ClassSpot interactive classrooms

Energy Analysis	Traditional Presentation Classroom System	ClassSpot Interactive Classroom System
Power Consumption Estimate (Watts)	594	445
Energy User per Week (kWH)	99.792	74.76
Annual Energy Use (kW)	5189.184	3887.52
Cost per kWH (National Average for U.S., 2008)	0.1077	0.1077
Annual Energy Cost	*$559*	*$419*
5-Year Energy Cost	*$2,795*	*$2,095*
Total Energy Cost (40 Rooms)	*$111,800*	*$83,800*
Energy Cost Savings		***25%***
Net Cost Savings for 40 Rooms		***$28,000***

Figure 1a. Schematic diagram for a traditional classroom AV presentation system. Hardware switching and control systems, along with associated cabling infrastructure, comprise a significant portion of the equipment expense for such designs.

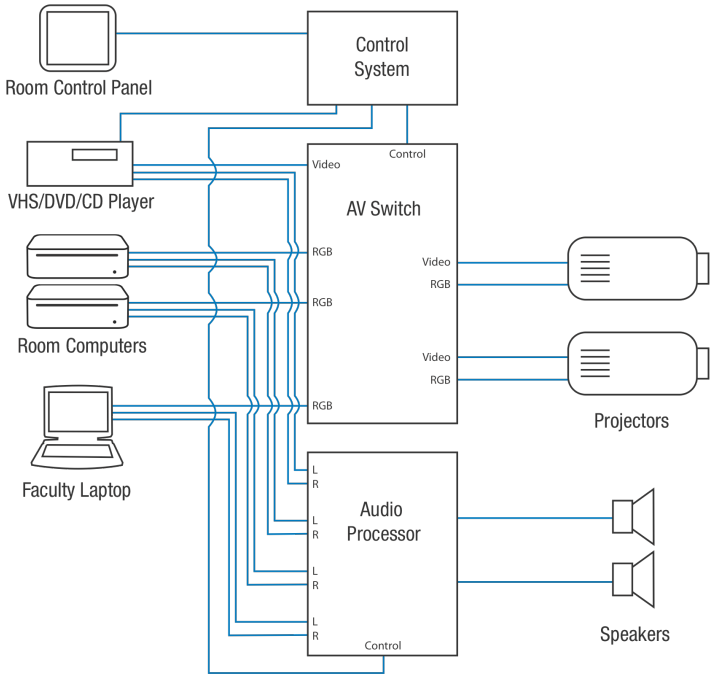

Figure 1b. Schematic diagram for an interactive classroom system using Tidebreak's ClassSpot. A wide variety of interactive capabilities are made possible using a software middleware infrastructure, dramatically simplifying the hardware footprint while greatly enhancing the classroom's flexibility.

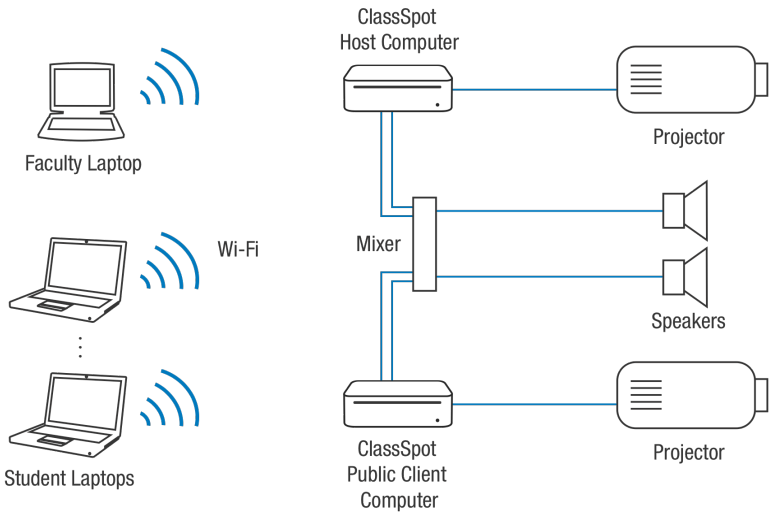

Reduce Classroom Downtime by Using Components That Can Be Rapidly Replaced

It can be difficult and costly to keep a full set of spare components in reserve when AV system components come from multiple manufacturers. When a component fails and no spare is on hand, the replacement process involves:

- Ordering a replacement component
- Shipping component to the campus
- Scheduling an AV contractor to perform the installation
- Installing and configuring the hardware

In a ClassSpot system, the primary system component – the Host computer – is an off-the-shelf computer that can be imaged using standard disk management utilities. Any failure can be handled by simply swapping out the computer hardware and re-instating the drive image. IT staff can thus use familiar tools to get a classroom back in operation with a delay measured in hours rather than days.

Figure 2. A comparison of classroom system capabilities by architecture

	Traditional AV System	ClassSpot System
Faculty can present slides on the front screen from the podium	●	●
Faculty can play multimedia clips on the front screen with full control from the podium	●	●
Faculty or students can move digital content between laptops and display screens in seconds with a simple drag-and-drop gesture		●
Faculty or students can collaboratively manage content across multiple display screens at the front of the room from their laptops		●
Faculty and students can jointly edit a file in any software application		●
Any student can present slides on the front screen from their laptop	(See note 1)	●
Any student can play multimedia clips on the front screen with full control from their laptop		●
Multiple students can work simultaneously on the front screens from their laptops		●
Any student can share a website or file to the front screen from their laptop in seconds		●
Any student can share their desktop to the front screen in view-only mode		●
Any student can share their desktop to the front screen in interactive mode, temporarily letting faculty or other students control applications on their laptop		●
Any student can send text comments to the session archive from their laptop at any time during class		●
Content that students and faculty share is automatically stored in the session archive		●
Drawings and notes from physical whiteboards are automatically stored in the session archive		●
Institutions can measure student interaction using automated data-collection and analysis tools		●

1. Students can only present if they bring their laptop to the podium to connect to a video cable

Shrink Facility Modification Costs by Diminishing Infrastructure Needs

Retrofitting an existing classroom with traditional AV systems can require substantial facilities modifications. Space needs to be allocated for equipment racks and custom AV cabling needs to be run through conduit systems, core drilled holes, or raised floor solutions that are costly to install. In some situations, electrical power capability needs to be expanded to support new electronics systems.

ClassSpot-based systems cut retrofit project costs by making it simple to physically implement an interactive learning space. No equipment rack is required and cabling consists of network cables for the ClassSpot Host and any other public computers. (Students use wireless connections.) It's thus simple to physically implement interactive learning spaces in existing classrooms.

Simplify the Purchase Process by Leveraging Pre-Negotiated Pricing Agreements

Components for new classroom systems are often purchased through AV integrators using a bidding process that adds time and expense to any installation project. In addition to creating additional procurement complexity, this process introduces another organizational point of contact to coordinate.

Hardware components required for a typical ClassSpot-based system consist of off-the-shelf computers, display systems, and audio program systems. All of these are typically available through existing hardware purchasing agreements that take advantage of volume discounts to achieve better pricing and simplify the purchase process.

Reduce Faculty Support Demands by Using a Familiar Interface Design

The effort it takes to learn to operate a customized AV control system, the inherent limitations of switching control, and the frequent need to initiate commands from a fixed location or a specialized wireless device can unnecessarily inhibit faculty in their instruction.

In contrast, anyone who uses a personal computer will be familiar with the interface mechanisms that ClassSpot provides. Faculty and students can learn the ClassSpot interface in minutes, with minimal formal training. Faculty can thus spend the "reclaimed" training time more productively. IT staff can similarly save time from training or responding to real-time support needs and instead focus on other high-value activities.

ENABLING LEARNING SPACE INNOVATION

Cost cutting doesn't need to put a stop to innovation. Forward-looking institutions are using ClassSpot to deploy a variety of advanced-capability spaces that serve emerging faculty needs in sustainable ways. They are able to use Tidebreak's reporting tools to directly measure the impact of their technology investments on learning.

Keep All Classrooms Equipped With the Latest Capabilities

With traditional AV systems, classroom capabilities are only updated when new hardware is installed. This means that classroom capabilities remain stagnant for several years, making it difficult to incrementally adapt classroom features to respond to faculty feedback and evolving instructional approaches. As a result, most classrooms will provide only basic presentation capabilities or will present a different user interface depending on when the room was last updated.

ClassSpot's software-based infrastructure makes it easy to simultaneously update system features across all campus classrooms by simply applying a software update. Each release introduces new features and modifications that respond to faculty and student needs so institutions can rapidly evolve their classroom learning spaces. Faculty can comfortably adapt their teaching to take advantage of new features available in any campus classroom; there is no need to rely on a particular room to support a specific pedagogical approach.

Make it Simple for Faculty and Students to Work Together Across Multiple Displays

The falling cost of display systems and the growing desire to spread digital content across a large display surface is making multi-screen "teaching walls" increasingly common in modern classrooms. While early installations used multi-headed computers driving two display screens, more advanced designs use a separate CPU for each display to offer more flexibility in supporting multiple independent users.

ClassSpot is particularly well suited for these advanced multi-screen environments. Using a software-defined room configuration model, ClassSpot simplifies the management of sophisticated room geometries. Faculty and students can easily move content across a hybrid collection of screen sizes as they use digital content to punctuate their activities.

Provide Flexibility That Makes it Easy to Reconfigure Classroom Spaces

Physical flexibility has become an important facet of learning space designs. AV systems often constrain flexibility as cabling infrastructures used to distribute audio and video signals dictate where equipment can be placed. Building for flexibility using these traditional approaches requires installing redundant infrastructures.

ClassSpot-enabled rooms leverage wireless networks and software-based infrastructure to support flexible environments where mobile devices can be deployed in different physical configurations at any time. This allows faculty and students to re-arrange themselves in a classroom as appropriate to the lesson plan. ClassSpot enables flexibility without the expense of redundant infrastructure.

Create Advanced Learning Space Configurations That Until Now Were Difficult to Implement

ClassSpot's software architecture makes possible what traditional systems cannot provide. Using the ClassSpot PBL (Project Based Learning) package, institutions can create highly-interactive team-based studio environments where faculty can shift from presentation to small-group breakout sessions easily. Multi-screen teaching walls with heterogeneous screen sizes and resolutions, interactive tabletop displays, and exotic multi-panel information walls can all be easily accommodated due to the way that ClassSpot "maps" the physical configuration of the classroom's systems. Such spaces can be configured – and re-configured as needed – using the standard computer network and off-the-shelf hardware components rather than specialized systems that require custom installation and configuration.

Measure the Impact of Your Technology Investments Directly With New Tools

Developing evidence of a connection between technology and learning is challenging. Qualitative studies are very time-consuming and costly endeavors. Data from AV system monitoring software packages only provide information on equipment states and maintenance status (e.g. power status, selected device, lamp life, etc.). This data does not show student activity patterns, and so cannot indicate the impact of technologies on learning.

Tidebreak's TideScope™ tool provides detailed data indicating how faculty and students use various classroom capabilities over days, weeks, or months. Systems administrators can generate graphical analyses of automatically-collected data in minutes and export these for use in reports and presentations. This data analysis can used to calculate return on investment (ROI) as well as to inform mid-course adjustments that can "tune" learning spaces and support activities based on direct evidence of activity patterns.

CREATING A SUSTAINABLE ECOSYSTEM OF ADVANCED LEARNING SPACES

Learning spaces are strategic assets that shape the collaborative fabric of academic communities. Since teaching and learning is central to the academic mission, the investment in these spaces is critical to the health of any institution. However, funding technology consistently ranks among the top challenges facing academic leaders, according to the EDUCAUSE Annual Top IT Challenges Survey. Those institutions that can simultaneously cut costs and realign remaining resources will ensure a sustainable future for their campus spaces.

Over the last decade, many campuses have experimented with various learning space configurations and technologies. Current economic conditions are driving this period of open-ended experimentation to a close. Institutions that will lead the way in the future will be those that learn to lower system implementation costs for advanced interactive learning spaces and deploy such spaces across their campuses. ClassSpot is uniquely able to help institutions make this kind of sustainable innovation broadly available.

To get a custom TCO analysis showing the classroom cost savings you can achieve, contact Tidebreak at sales@tidebreak.com.

> *"Learning spaces are strategic assets that shape the collaborative fabric of academic communities… Institutions that will lead the way in the future will be those that learn to lower system implementation costs for advanced interactive learning spaces and deploy such spaces across their campuses."*

Acknowledgements

Tidebreak would like to thank the following organizations for contributing data and feedback in support of the analysis in this paper:

- Queensland University of Technology
- San Diego State University
- Shen Milsom Wilke, Inc.
- The Sextant Group, Inc.
- University of California, San Diego
- University of North Carolina
- University of San Diego
- University of Washington
- Waveguide Consulting, Inc.

Tidebreak, Inc.

(650) 289-9869
www.tidebreak.com